DIALIGHT PART NO.	LED COLOR	LENS COLOR
521-5004F	IR 850	WATER CLEAR
521-5005F	IR 940	WATER CLEAR

NOTES:

1. PARTS ARE TO BE SUPPLIED IN 12mm CARRIER TAPE ON 7" REEL 1500 PCS PER REEL.
2. PIN NUMBERS ARE FOR REFERENCE ONLY, DESIGNATION NON-EXISTENT ON PART.
3. THIS ASSEMBLY CONTAINS ELECTROSTATIC DISCHARGE SENSITIVE DEVICES (ESDS). MAINTAIN ALL PRECAUTIONARY MEASURES DURING ASSEMBLY, HANDLING AND STORAGE IN ACCORDANCE WITH IPC-A-610.
4. THIS PRODUCT IS RoHS COMPLIANT. EACH BAG IS TO BE MARKED WITH RoHS COMPLIANT LABEL OR EQUIVALENT MARKINGS. LED MUST BE Pb FREE.
5. MOISTURE SENSITIVITY LEVEL IS 1.

REV	ECN NO	REVISIONS	DRN	CKD	APP	QA	CM	DATE
A	122228	NEW RELEASE	LD	CS				9-13-24
B	126072	REVISED NOTE 5, MSL WAS 2	LD	CS				1-7-25

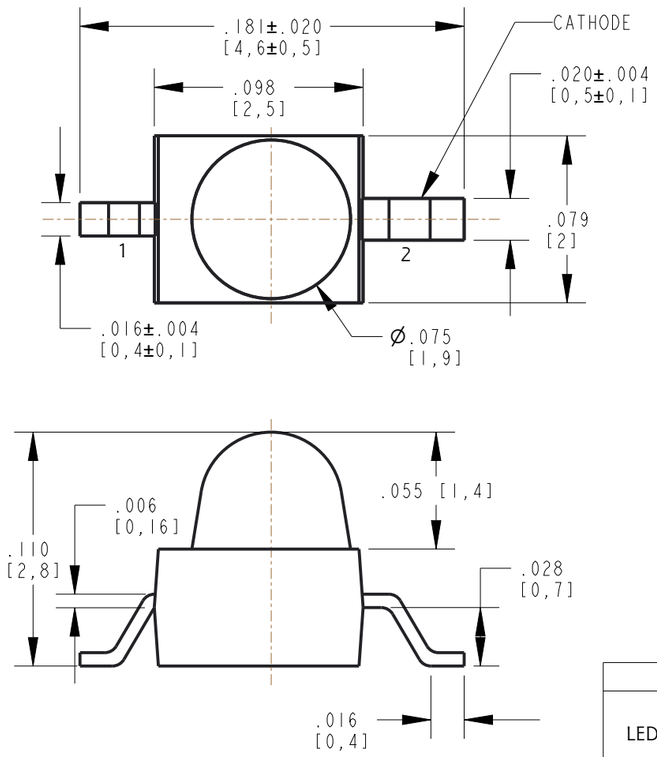

LED SCHEMATIC

TAPE DIMENSION (mm)

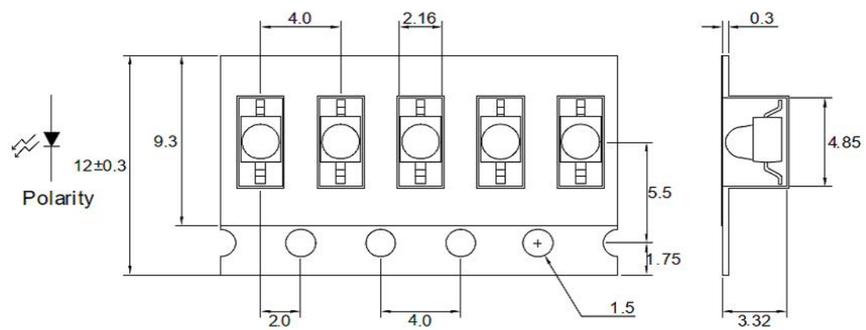

ABSOLUTE MAXIMUM RATINGS AT 25°C							
LED COLOR	POWER DISSIPATON (mW)	FORWARD CURRENT (mA)	PEAK FORWARD CURRENT *(A)	REVERSE VOLTAGE (V)	ELECTROSTATIC DISCHARGE (V)	OPERATING TEMPRATURE (°C)	STORAGE TEMPRATURE (°C)
IR 850	100	50	1	5	2000	-40 TO +85	-40 TO +85
IR 940	100	50	3	5	2000	-40 TO +85	-40 TO +85

*PEAK FORWARD CURRENT : 300PPS,1uS PULSE

RECOMMENDED WAVE SOLDER PROFILE

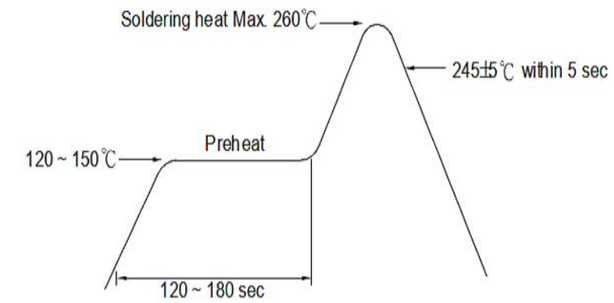

RECOMMENDED PB-FREE REFLOW SOLDER PROFILE

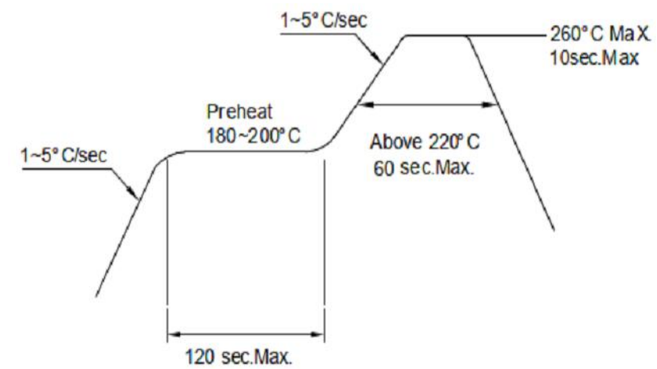

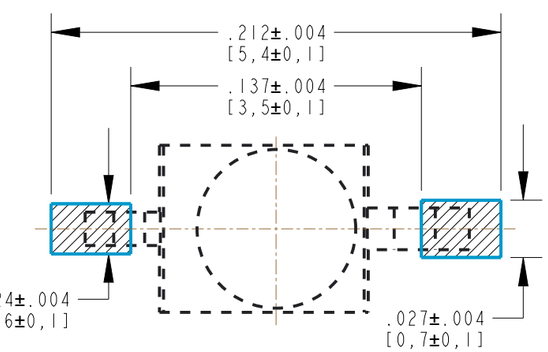

RECOMMENDED PAD LAYOUT

ELECTRICAL OPTICAL CHARACTERISTICS AT 25°C													
LED COLOR	TEST CONDITION	RADIENT INTENSITY (mW/sr)			RADIENT INCIDENCE (mW/cm²)			PEAK WAVELENGTH (nm)	SPECTRAL LINE HALF-WIDTH (nm)	FORWARD VOLTAGE (V)		REVERSE CURRENT (uA)	VIEWING ANGLE (DEG)
	I_F(mA)	MIN.	TYP.	MAX.	MIN.	TYP.	MAX.	TYP.	TYP	TYP	MAX.	MAX.	TYP
IR 850	20	5.0	10.0	20.0	0.71	1.42	2.84	850	50	1.2	1.6	100@5V	20
IR 940	20	1.6	5.0	12.0	0.22	0.71	1.71	940	50	1.2	1.6		

ATTENTION:
OBSERVE PRECAUTIONS FOR HANDLING ELECTROSTATIC SENSITIVE DEVICES

THIS DRAWING AND THE CONTENTS HEREIN ARE CONFIDENTIAL AND THE SOLE PROPERTY OF DIALIGHT CORP. REPRODUCTION OF THIS DRAWING OR CONSTRUCTION OF ANY PARTS WITHIN THIS DRAWING ARE FORBIDDEN WITHOUT THE WRITTEN CONSENT OF DIALIGHT CORP.

DIALIGHT CORP INTERNAL REFERENCE ONLY = 3D MODEL : 450052187XX30-.1

SCALE: 14.000

ALL DIM's: INCH (mm)

TOLERANCES:
UNLESS OTHERWISE SPECIFIED
FRACTIONS: ±1/64
DECIMALS (.XX): ±.01
DECIMALS (.XXX): ±.005
DECIMALS (.XXXX): ±.0005
ANGLES: ±1°

FINISH: —

FSCM 83330

DRAWING NUMBER: C-18779

REV: B

TITLE: 1.9mm GULLWING LED

MATERIAL: —

Dialight
1501 ROUTE 34 SOUTH
FARMINGDALE, NJ 07727
(732) 919-3119
www.dialight.com

SHEET 1 OF 1

FAMILY TABLE: